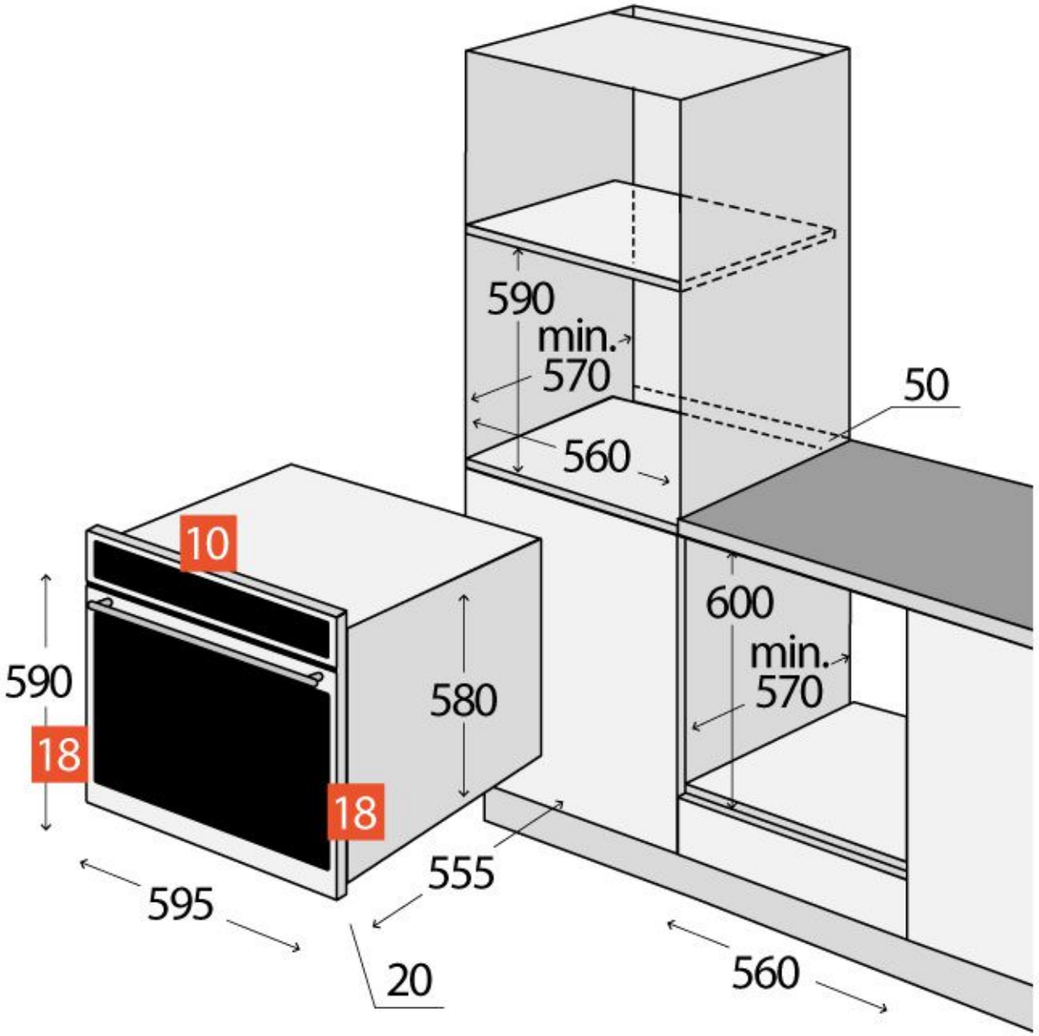
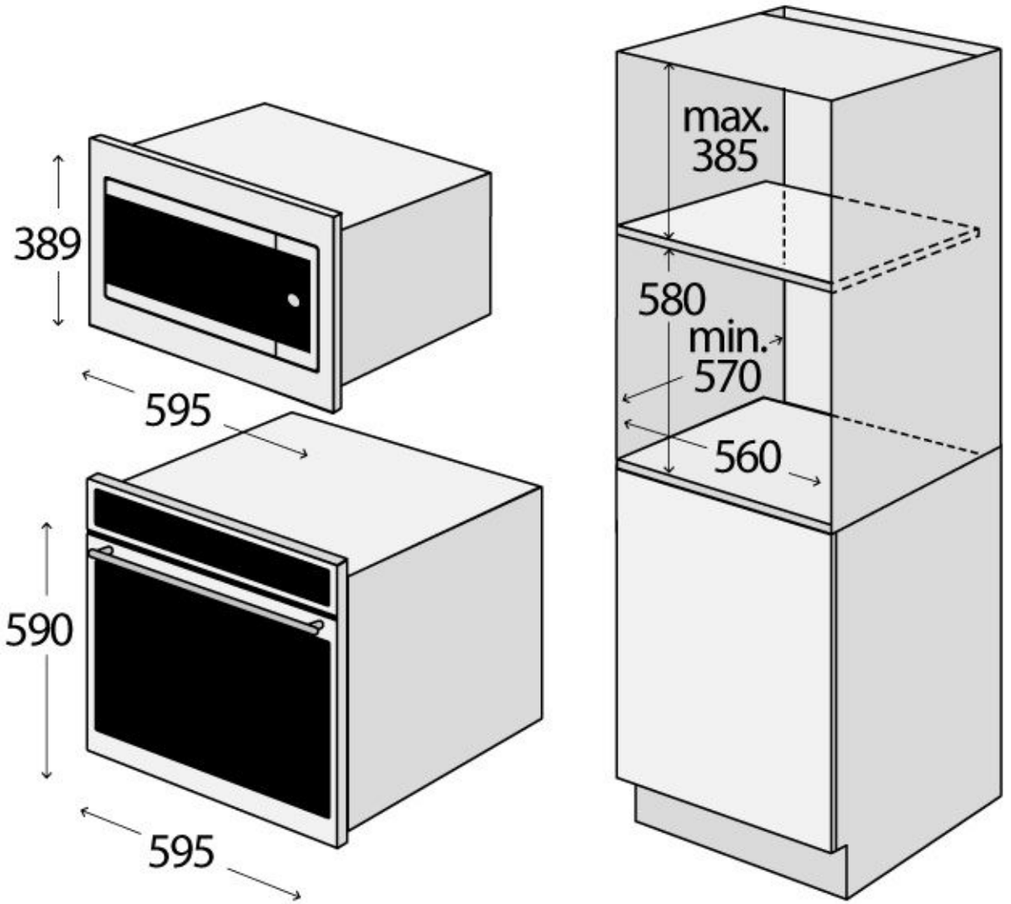
SET 8x60ds + MTV7525ds