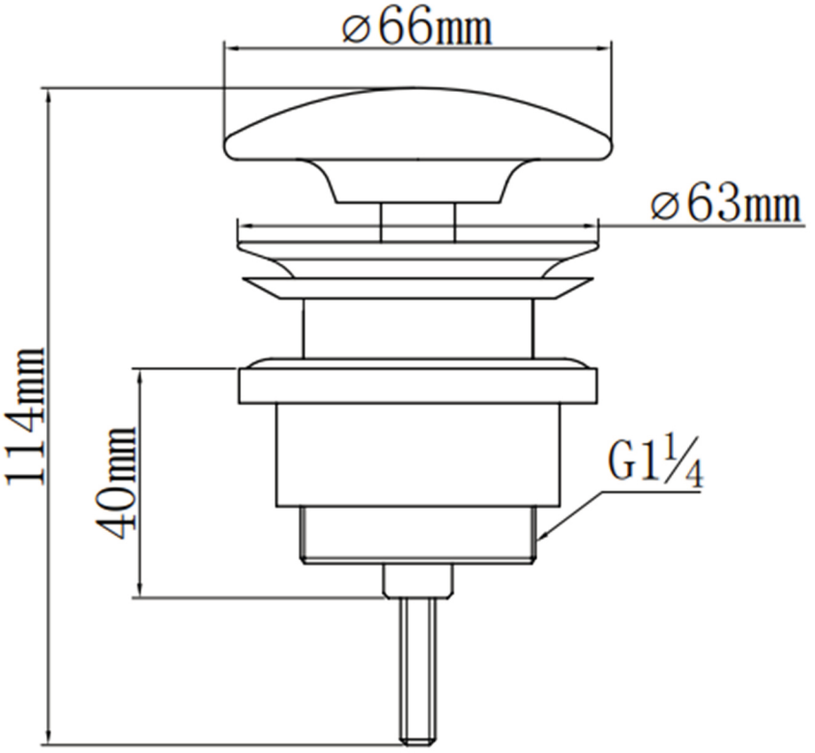
⌀66mm
⌀63mm
114mm
40mm
G1¼