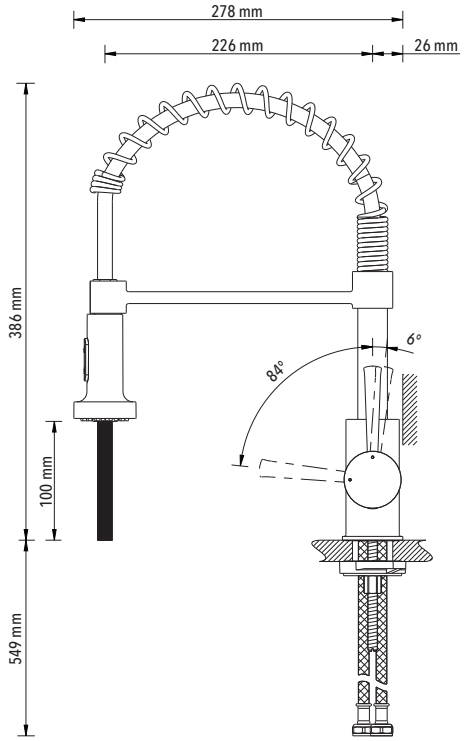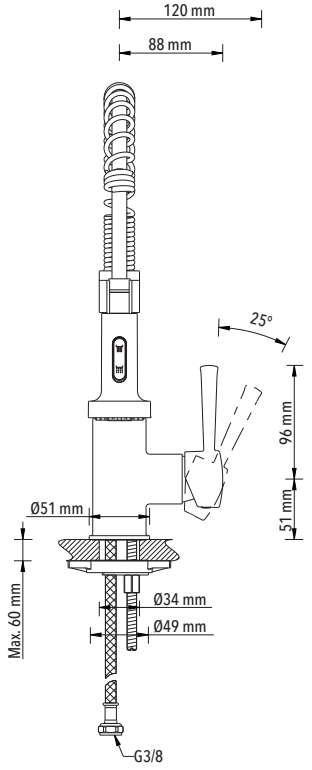TIBER Art. 12267730