Nr	Ändring	Datum	Godk av

A-A (1 : 5)

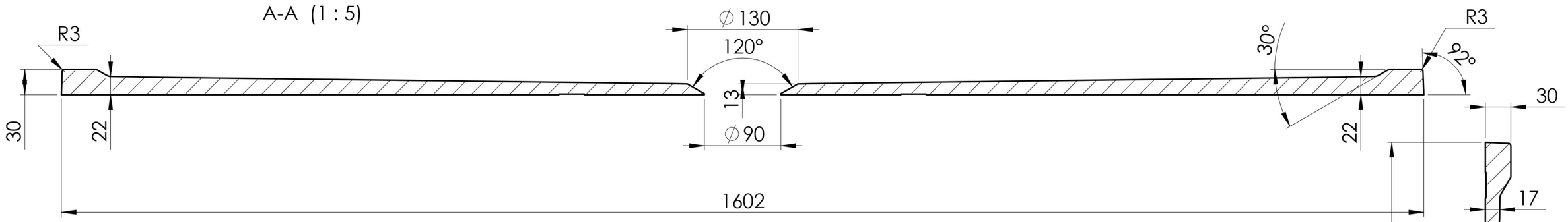

FOR MORE INFOS (radie)PLEASE SE OLD AND EXISTING KLARA SHOWER TRAYS(1600x800)

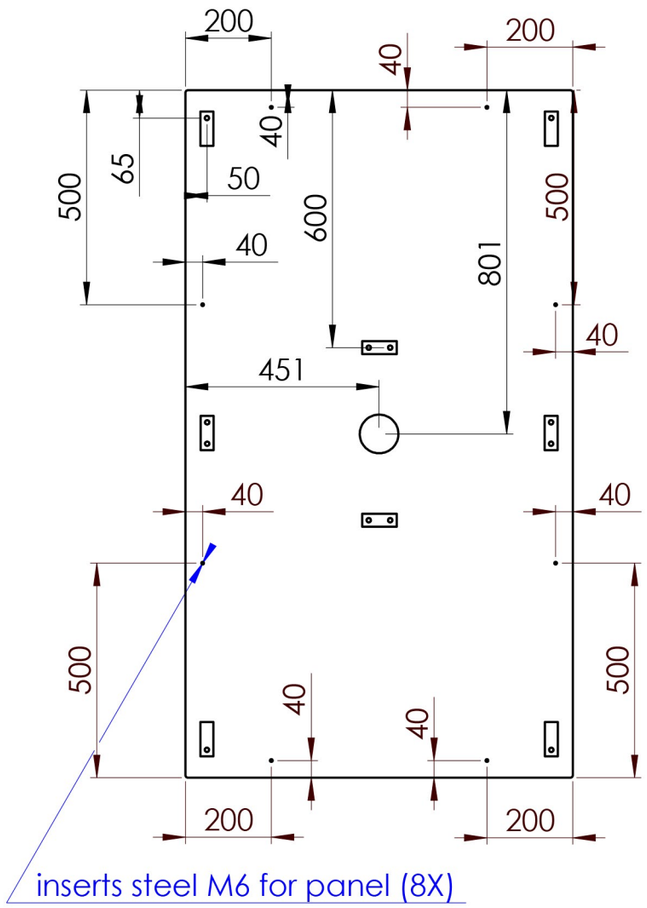

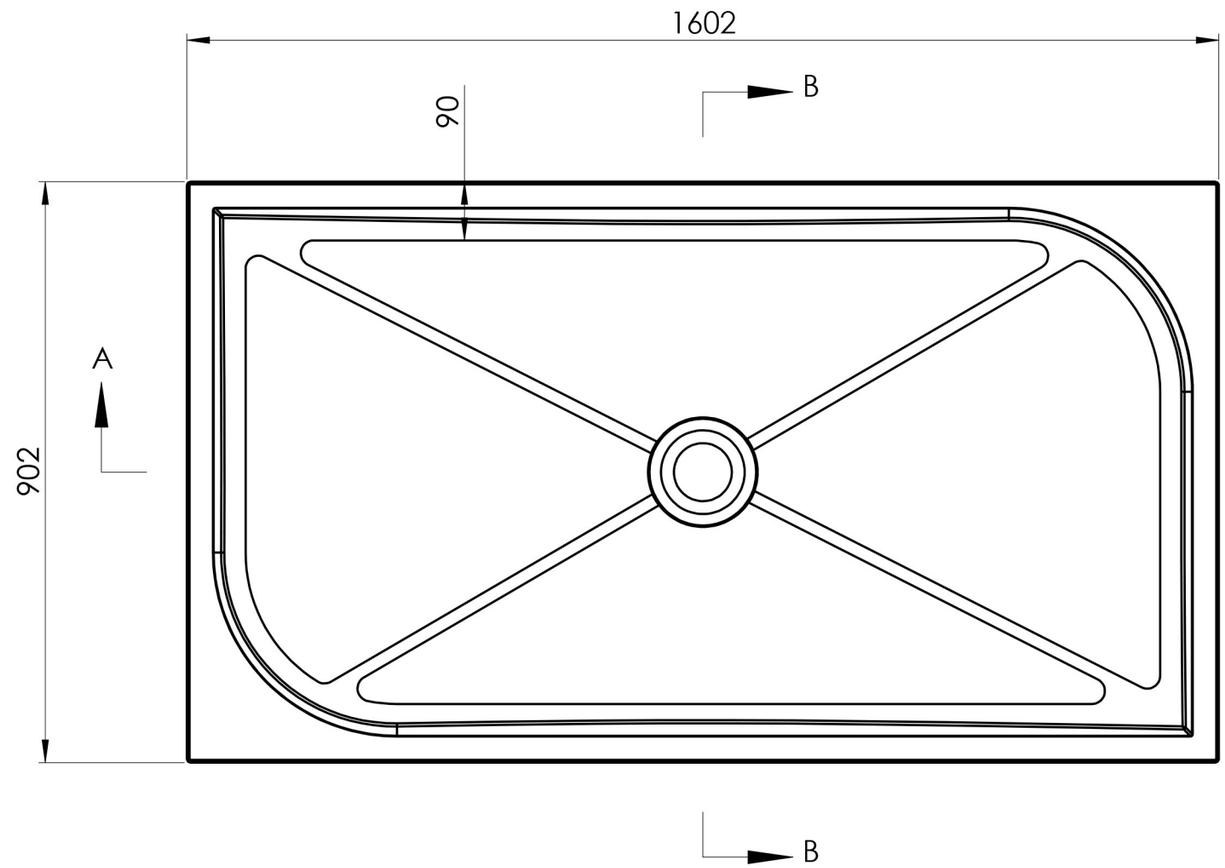

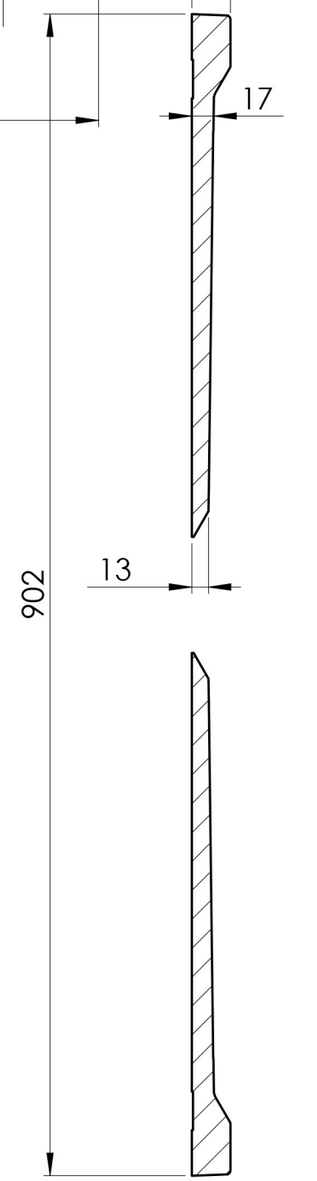

B-B (1 : 5)

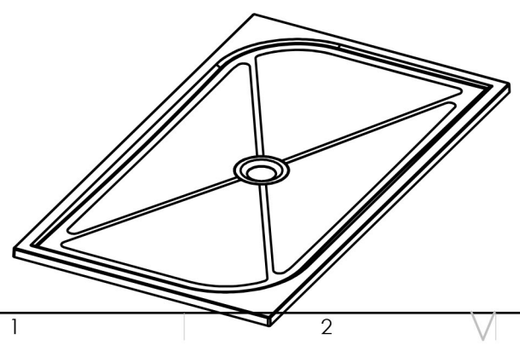

Tolerance length	+3/-0 mm
Tolerance length granite	+1.5/-1.5 mm
Tolerance Taphole Location	+3/-3 mm
Tolerance overflowhole Location	+3/-3 mm
Tolerance plane bending	+1.5/-1.5 mm

This document must not be copied without our written permission, and the contents thereof must not be imparted to a third party nor be used for any unauthorized purpose. Controvention will be prosecuted.